End Caps

Expansion joint end caps for exterior applications
Roof to Roof and roof to wall condition

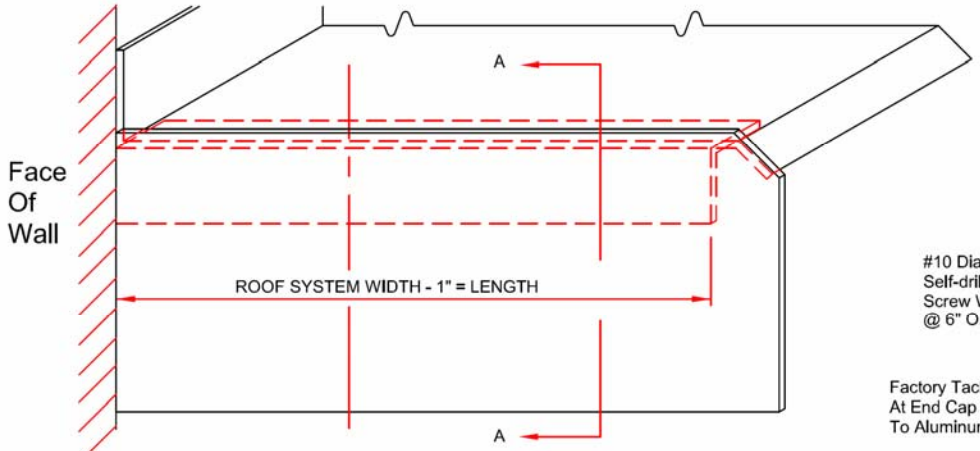

ROOF TO WALL END CAP PLATE DETAIL
AT EXPANSION JOINT DOWNTURN

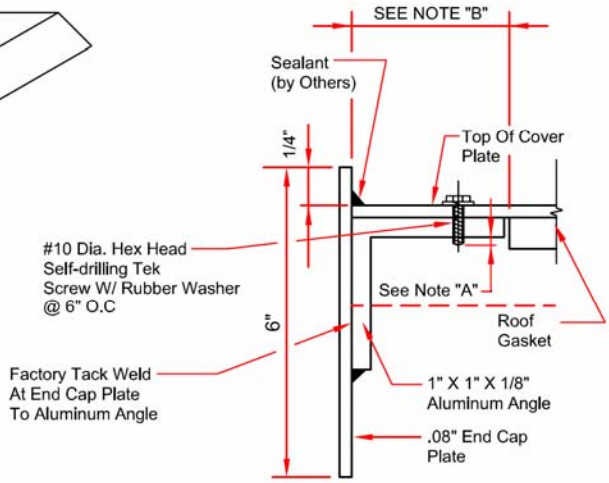

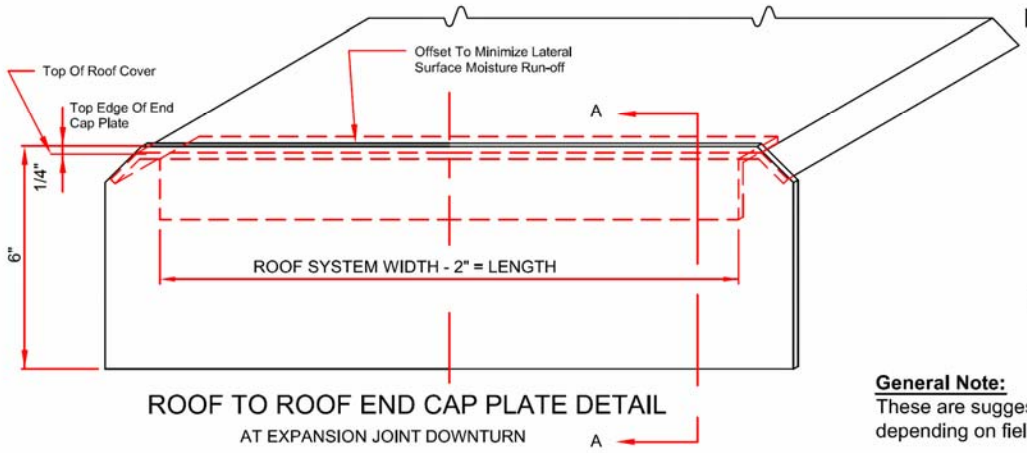

ROOF TO ROOF END CAP PLATE DETAIL
AT EXPANSION JOINT DOWNTURN

NOTE "A" Grind Screw Smooth W/ Underside Of Plate After Installation

SECTION A-A

DETAIL "A"

END CAP PLATE DETAILS

APPLICABLE TO RFL & RFH

NOTE "B" Terminate Roof Gasket 1" From Edge Of Roof System To Clear 1" X 1" X 1/8" Aluminum Angle

General Note:
These are suggested transitions. Actual transitions may vary depending on field conditions.

Shown with Left Cap

NYSTROM®
Right to site.

9300 73rd Avenue North
Brooklyn Park, MN 55428

PROJECT:

CONTRACTOR:

ARCHITECT:

INITIALS: **QTY:** **DATE:** **PART NUMBER:**