For Typical Splice Details
Refer to Dwg's: C-16175-06 for Flush Conditions
C-16175-07 for Corner Conditions

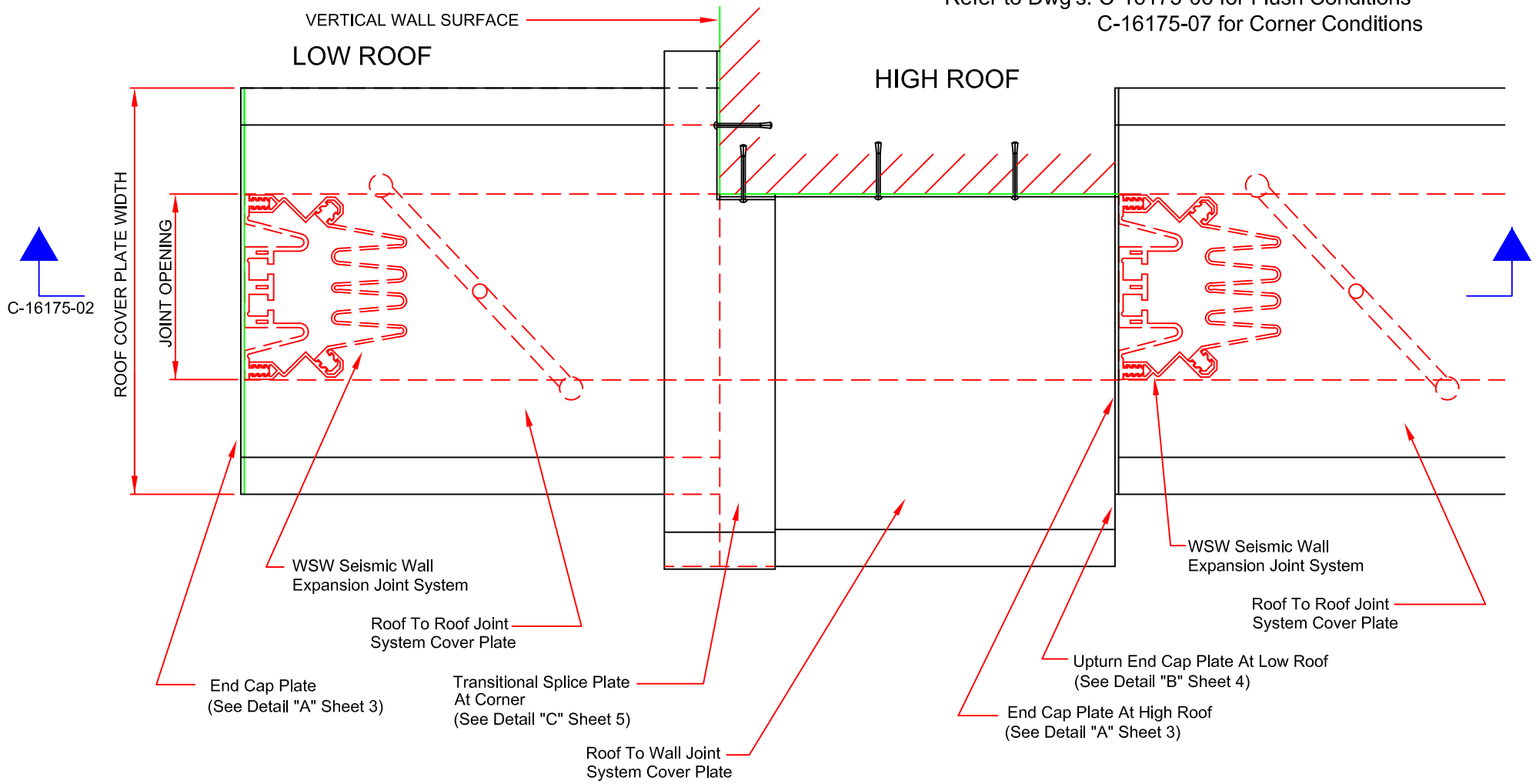

General Note:
These are suggested transitions. Actual transitions may vary depending on field conditions.

TYPICAL ROOF EXPANSION JOINT
APPLICATIONS
PARTIAL PLAN VIEW

EJ-RJS

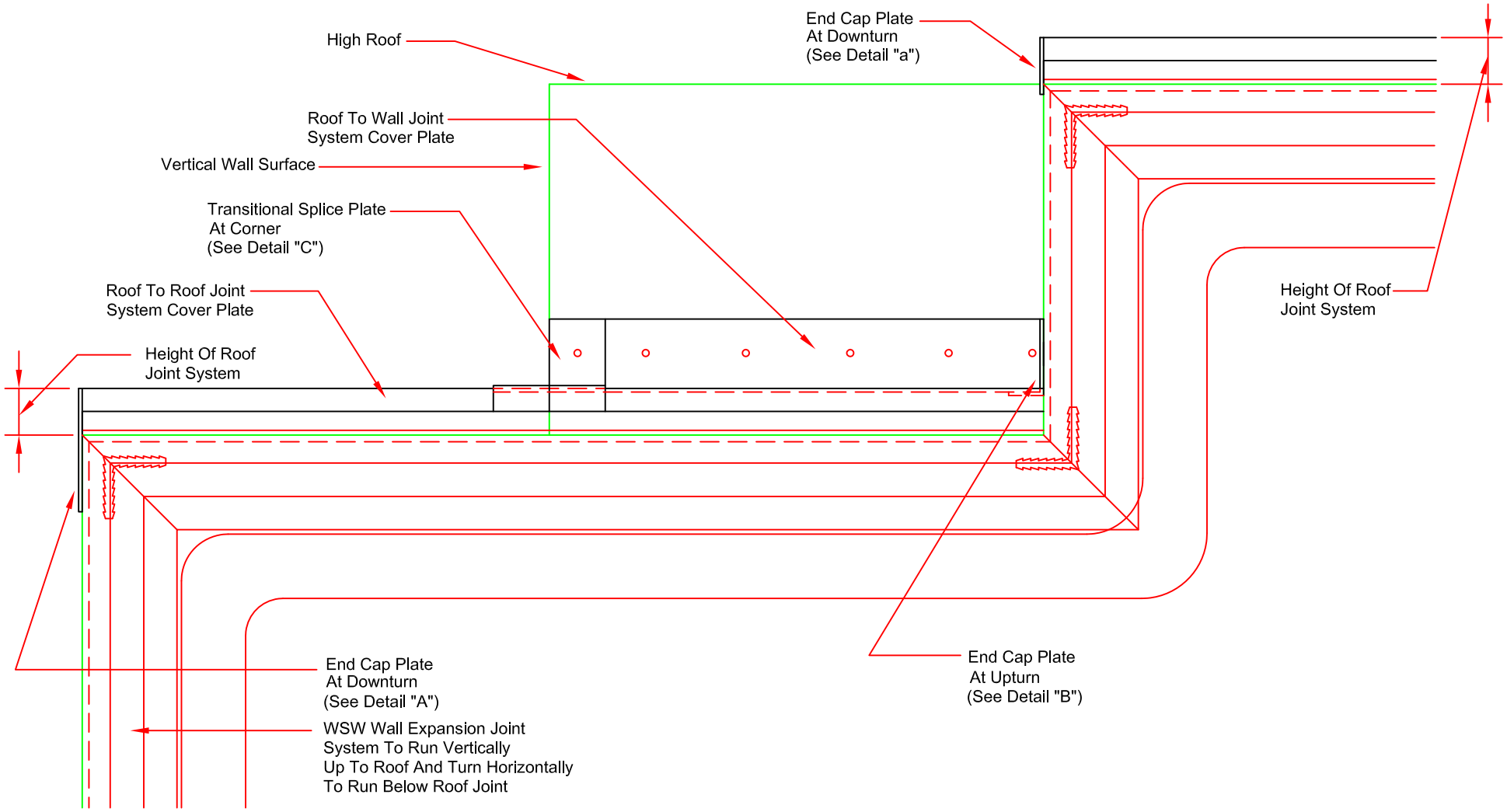

General Note:
These are suggested transitions. Actual transitions may vary depending on field conditions.

TYPICAL ROOF EXPANSION JOINT
APPLICATIONS
SIDE SECTION VIEW

EJ-RJS

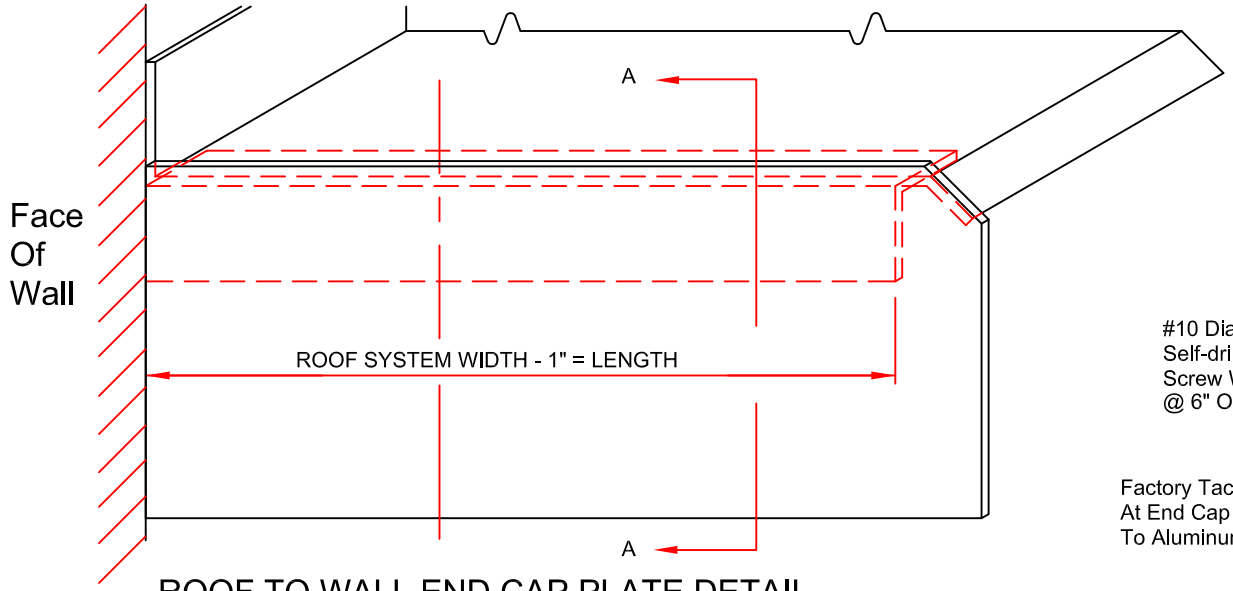

ROOF TO WALL END CAP PLATE DETAIL

AT EXPANSION JOINT DOWNTURN

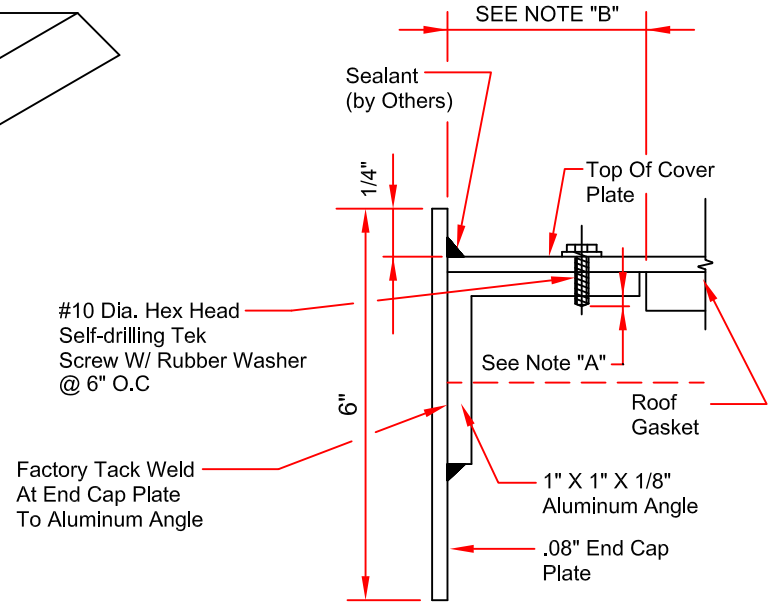

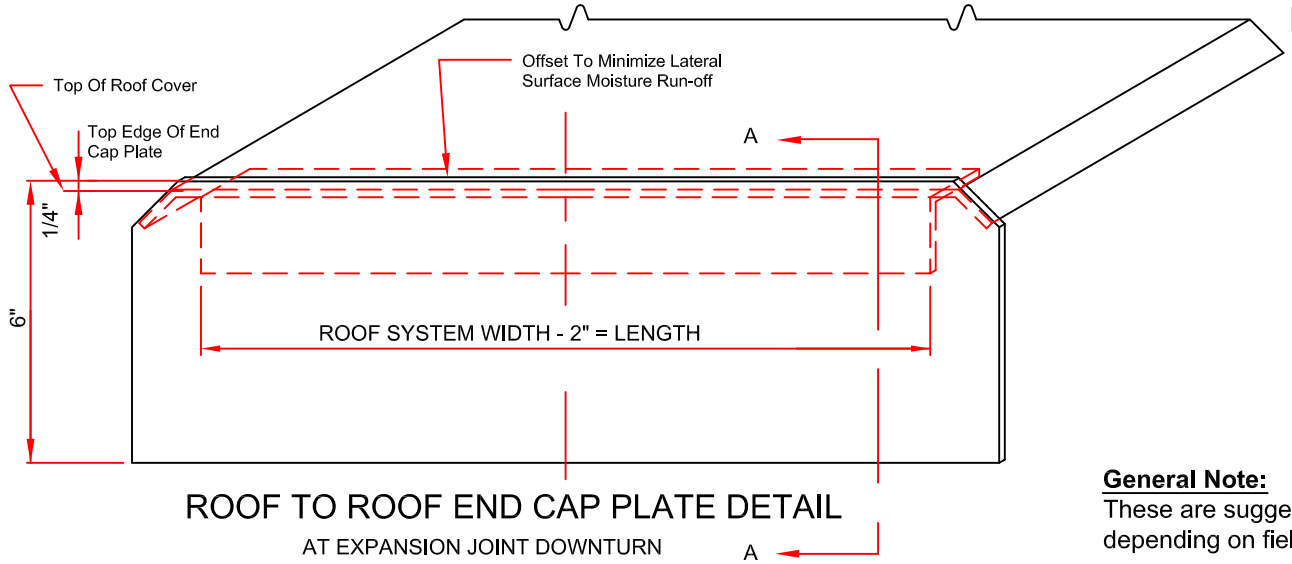

ROOF TO ROOF END CAP PLATE DETAIL

AT EXPANSION JOINT DOWNTURN

NOTE "A" Grind Screw Smooth W/ Underside Of Plate After Installation

SECTION A-A

DETAIL "A"

END CAP PLATE DETAILS

APPLICABLE TO RFL & RFH

NOTE "B" Terminate Roof Gasket 1" From Edge Of Roof System To Clear 1" X 1" X 1/8" Aluminum Angle

General Note:

These are suggested transitions. Actual transitions may vary depending on field conditions.

EJ-RJS

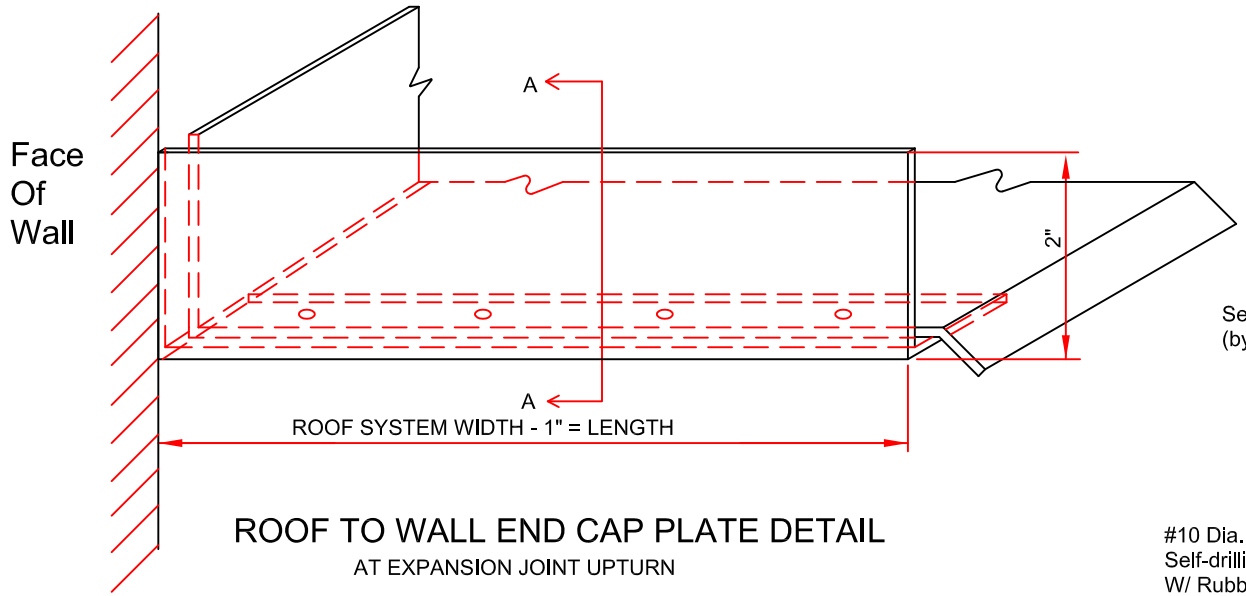

ROOF TO WALL END CAP PLATE DETAIL

AT EXPANSION JOINT UPTURN

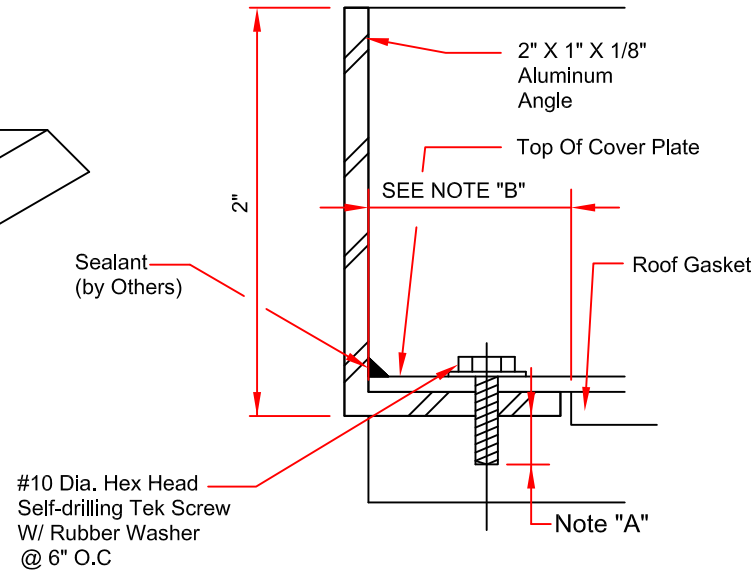

SECTION A-A

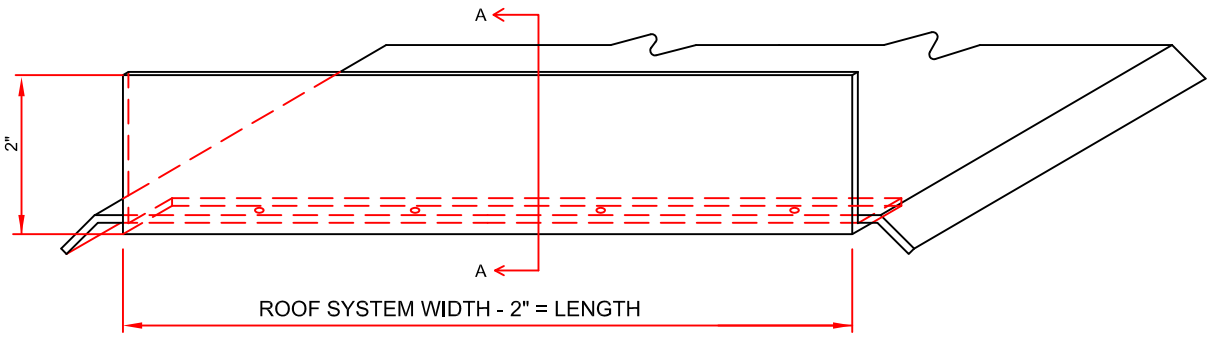

ROOF TO ROOF END CAP PLATE DETAIL

AT EXPANSION JOINT UPTURN

DETAIL "B"
END CAP PLATE DETAILS

NOTE "A" Grind Screw Smooth W/ Underside Of Plate After Installation

NOTE "B" Terminate Roof Gasket 1" From Edge Of Roof System To Clear 2 X 1 X 1/8" Aluminum Angle.

General Note:
These are suggested transitions. Actual transitions may vary depending on field conditions.

EJ-RJS

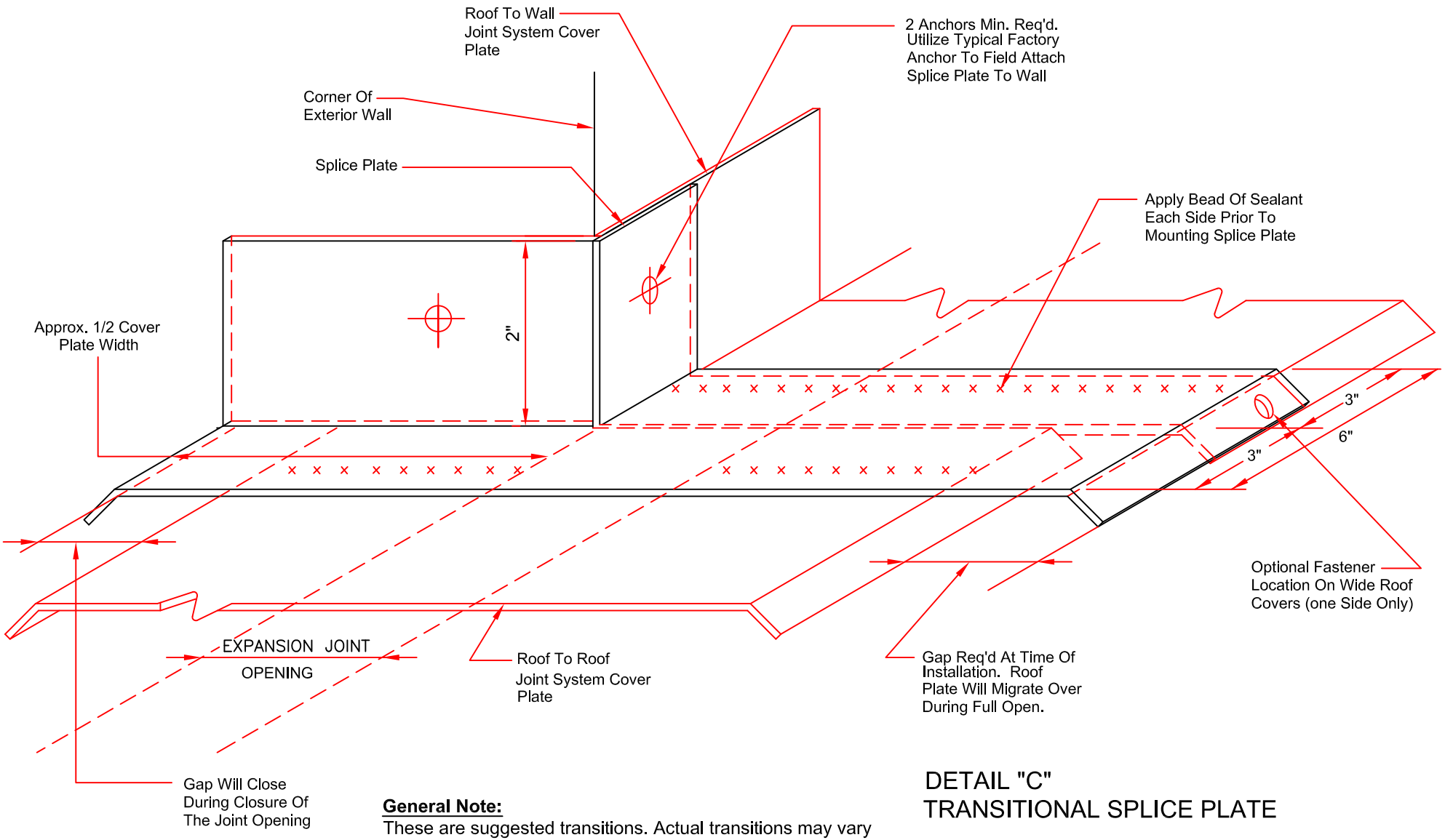

General Note:
These are suggested transitions. Actual transitions may vary depending on field conditions.

DETAIL "C"
TRANSITIONAL SPLICE PLATE

EJ-RJS

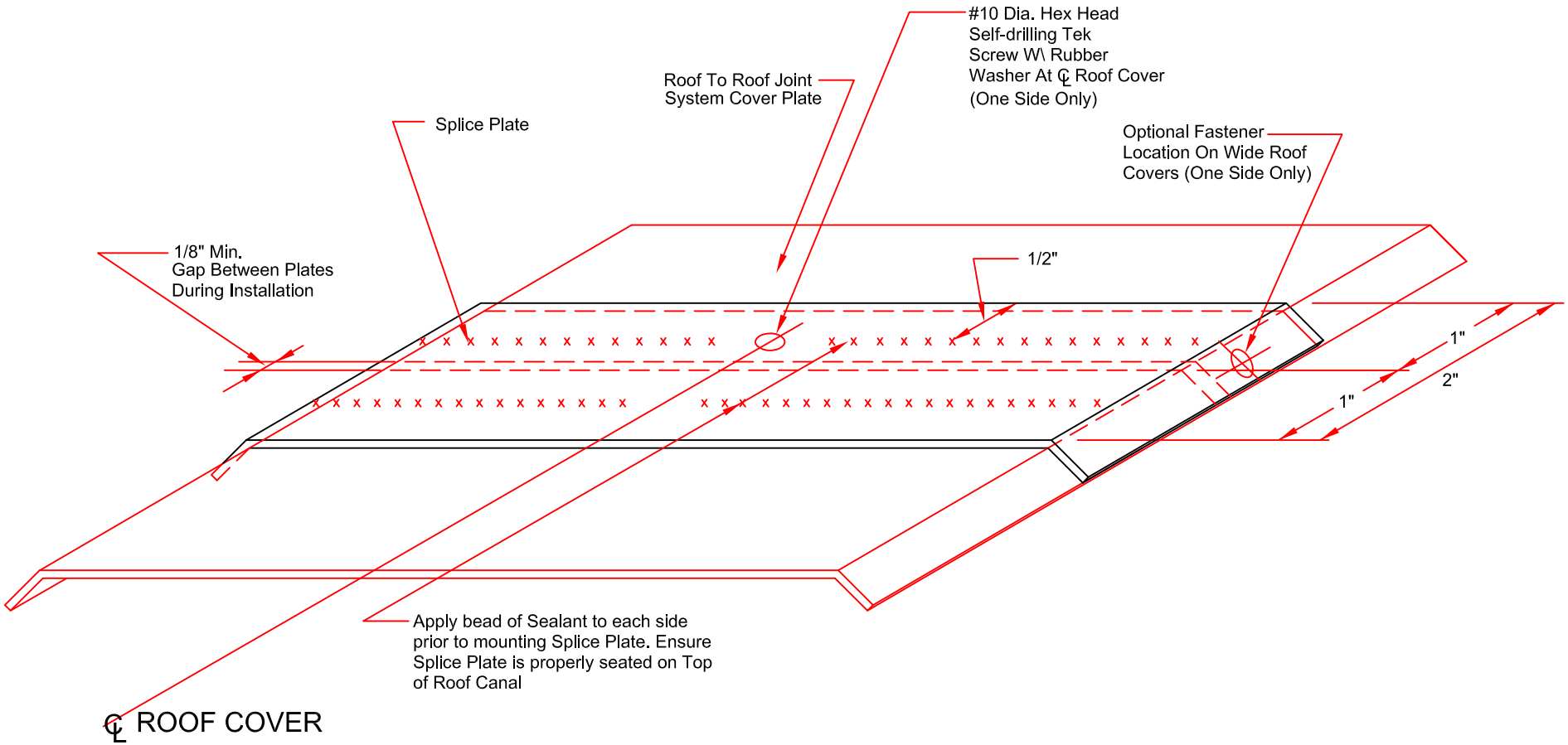

ROOF SPLICE PLATE
(FLUSH CONDITION)

General Note:
These are suggested transitions. Actual transitions may vary depending on field conditions.

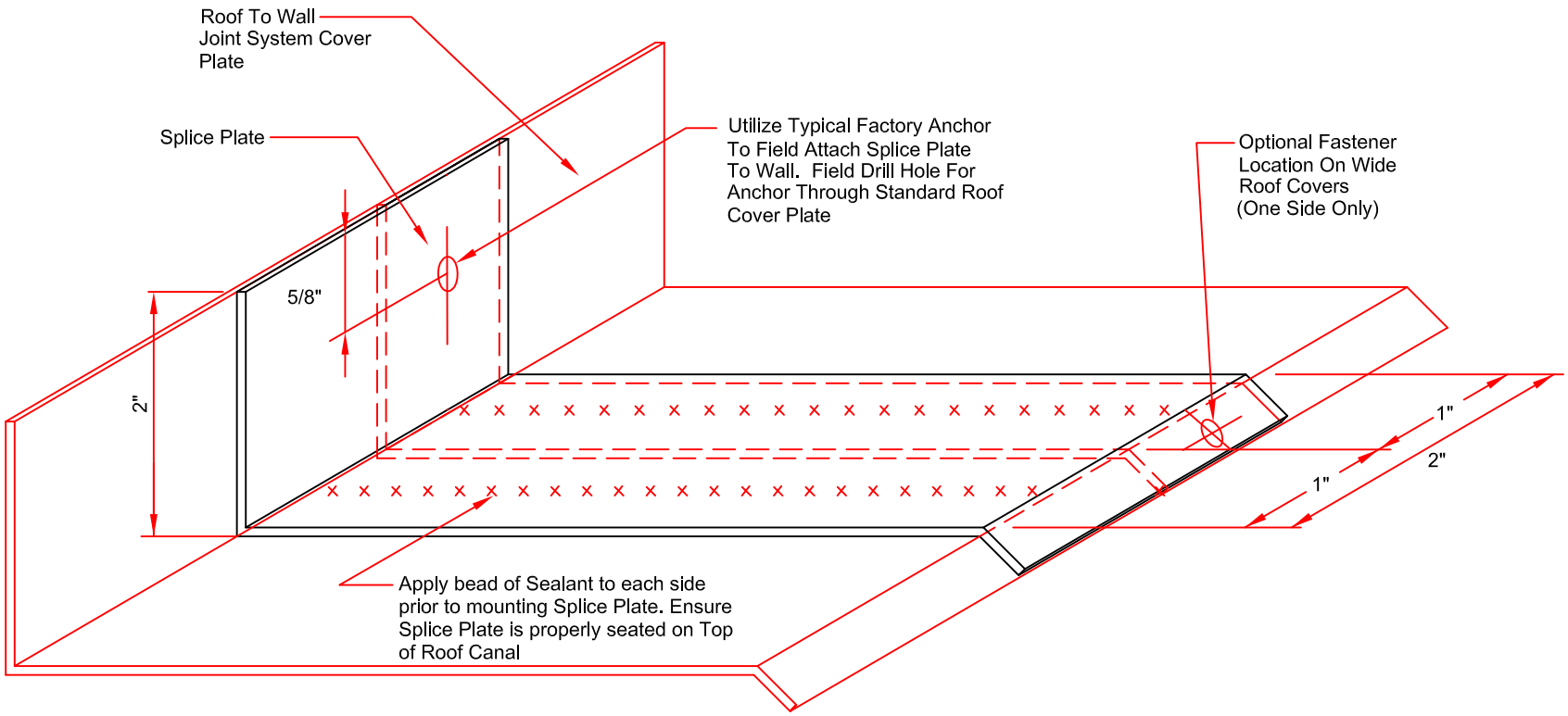

ROOF SPLICE PLATE (CORNER CONDITION)

General Note:
These are suggested transitions. Actual transitions may vary depending on field conditions.