9300 73rd Ave N.
Brooklyn Park, MN 55428

Toll-Free: 800-547-2635
Fax 800-317-8770

NYSTROM
Right to site.

Direct Phone: 763-488-9200
Direct Fax: 763-488-9201

e-mail: info@nystrom.com
Internet: www.nystrom.com

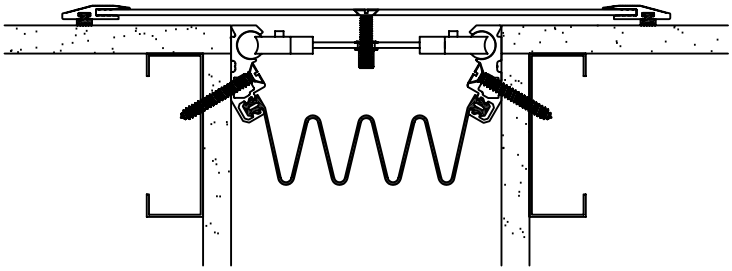

Model EJ–RJX
Flush Condition

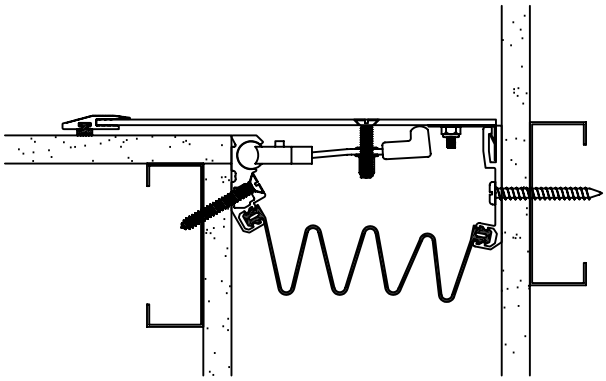

Model EJ–RJX
Corner Condition

Seismic Cover – Professional Series
Model(s) EJ–RJX and EJ–RJX–W
Vertical Expansion Control System

The following installation procedure is very important and must be fully understood prior to beginning any work. To ensure proper installation and performance of expansion joint system the following actions must be completed by the installing contractor. Failure to do so will affect product warranty.

1) Carefully read and understand installation procedure. Contact Technical Service Department for product assistance.
2) Inspect all shipments and materials for missing or damaged components and hardware. Contact Customer Service with order number and invoice for prompt assistance.
3) Inspect substrate or adjacent construction for acceptance before beginning work. Report unacceptable construction to the project manager for scheduled repair work.

PN: N20196

Standard Components

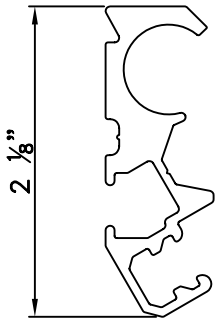

Aluminum extrusion
(p/n: 15398)

INS seal strip
(p/n: 2838)

Screw ¼" x 1 ¾"
(p/n: 5621)

PrimaLub Adhesive
(p/n: 2720)

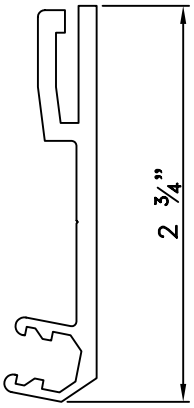

Aluminum wall mount extrusion
corner applications only
(p/n: 18044)

Screw ¼" x 2"
(p/n: 5628)

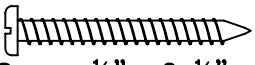

Screw ¼"x 2 ½"
corner conditions
(p/n: 5759)

Components shown below vary in size depending on model of system

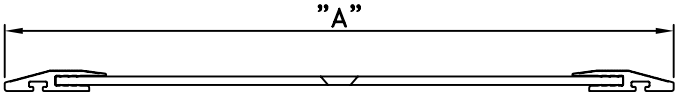

Coverplate – flush condition

Model #	Part #	"A" dim.
EJ-RJX-600	15400	13 1/2"
EJ-RJX-800	15401	17 1/2"
EJ-RJX-1000	15402	21 1/2"
EJ-RJX-1200	15403	25 1/2"
EJ-RJX-1800	15404	37 1/2"
EJ-RJX-2400	15405	49 1/2"

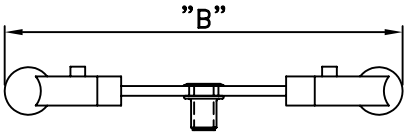

Self–center bar – flush condition

Model #	Part #	"B" dim.
EJ-RJX-600	15643	12 3/8"
EJ-RJX-800	15630	18 3/8"
EJ-RJX-1000	15631	22 3/8"
EJ-RJX-1200	15603	26 3/8"
EJ-RJX-1800	15604	38 3/8"
EJ-RJX-2400	15641	50 3/8"

Moisture Barrier – extruded

Model #'s	Part #
EJ-RJX-600 & 600W	1175
EJ-RJX-800 & 800W	1175
EJ-RJX-1000 & 1000W	1176
EJ-RJX-1200 &1200W	1177

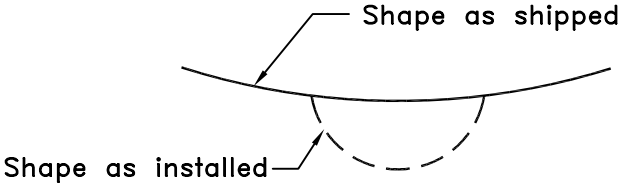

Moisture barrier – sheet material

Model #'s	Part #
EJ-RJX-1800 & 1800W	2962
EJ-RJX-2400 & 2400W	2962

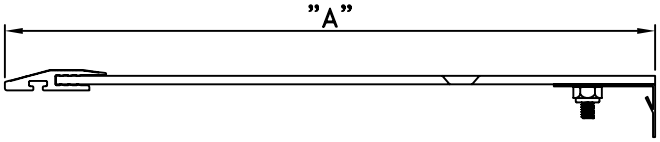

Coverplate – corner condition

Model #	Part #	"A" dim.
EJ-RJX-600W	15406	9 5/8"
EJ-RJX-800W	15407	12 5/8"
EJ-RJX-1000W	15408	15 5/8"
EJ-RJX-1200W	15409	18 5/8"
EJ-RJX-1800W	15410	27 5/8"
EJ-RJX-2400W	15411	36 5/8"

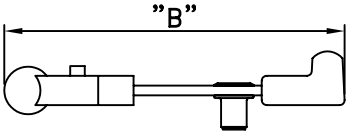

Self–center bar – corner condition

Model #	Part #	"B" dim.
EJ-RJX-600W	15658	9"
EJ-RJX-800W	15659	12"
EJ-RJX-1000W	15660	14"
EJ-RJX-1200W	15661	16"
EJ-RJX-1800W	15663	22"
EJ-RJX-2400W	15665	28"

Flush Condition

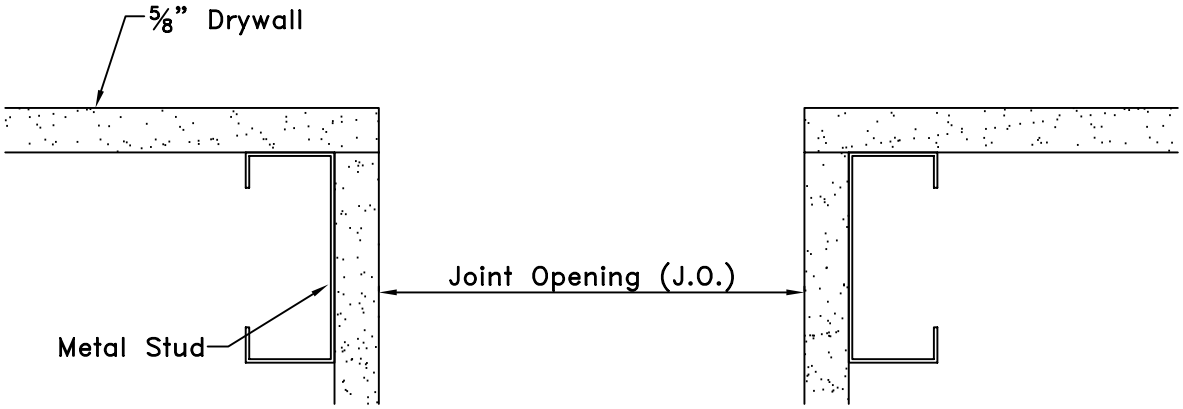

Dimension Chart

Model #	"J.O."
EJ-RJX-600	6"
EJ-RJX-800	8"
EJ-RJX-1000	10"
EJ-RJX-1200	12"
EJ-RJX-1800	18"
EJ-RJX-2400	24"

1 Prior to begining work, installer shall inspect for proper wall construction. Verify joint opening is as called for on chart.

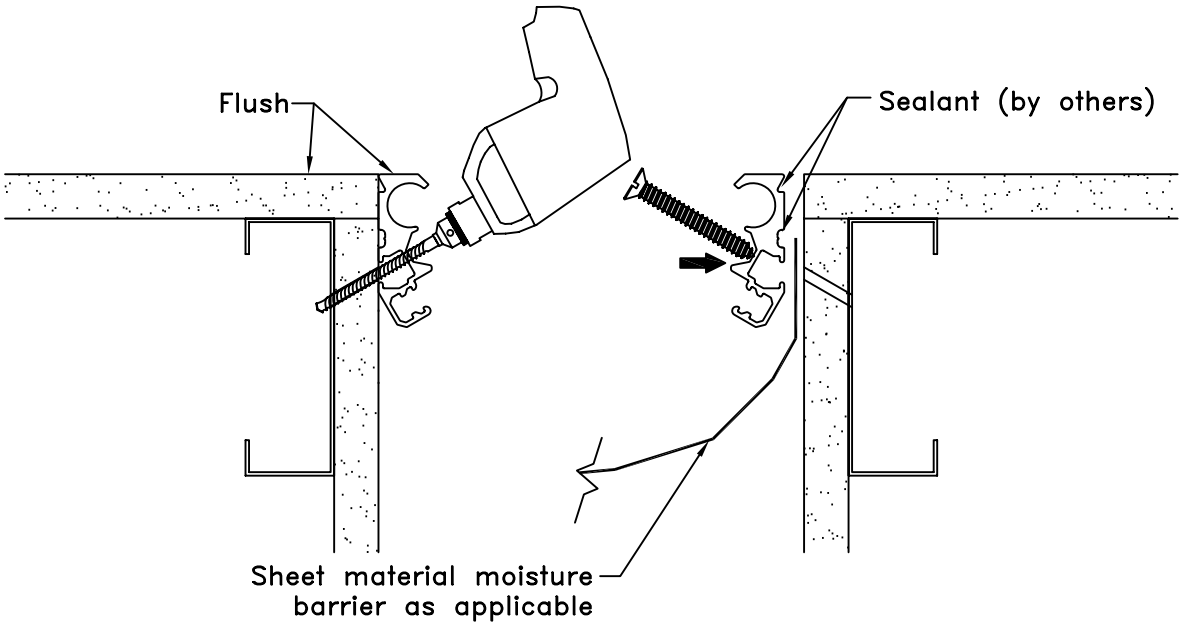

2 Place aluminum extrusion on edge of opening as shown. Drill through extrusion and drywall into stud. Apply sealant (by others) along two grooves on backside of extrusion. If installing system with sheet material for moisture barrier place between wall and extrusion. Fasten with ¼" x 2" screws spaced at 18" o.c. maximum, start 6" from ends.

NOTE: See steps 3 & 4 next page before installing all base members.

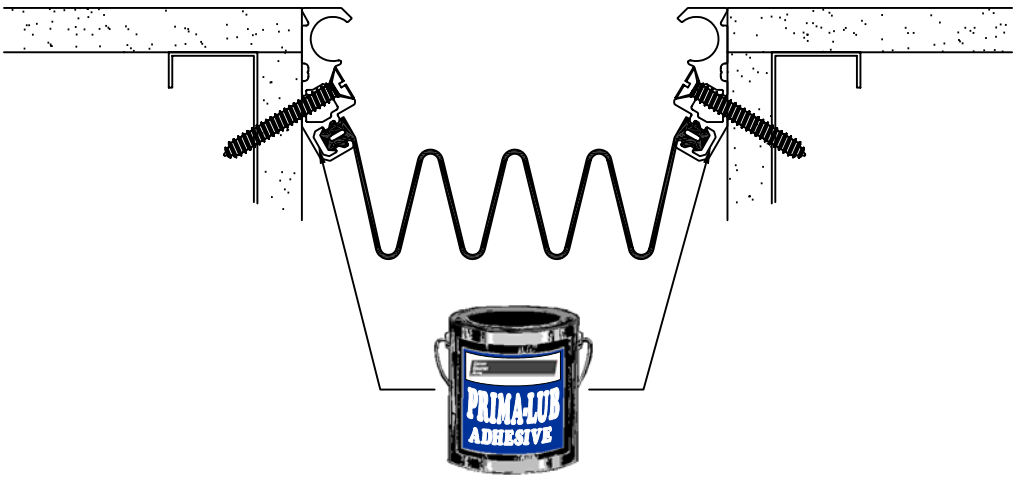

3 Brush apply PrimaLub adhesive into extrusion cavity for the moisture barrier lug. Immediately insert moisture barrier lug into cavity, ensure full engagement.

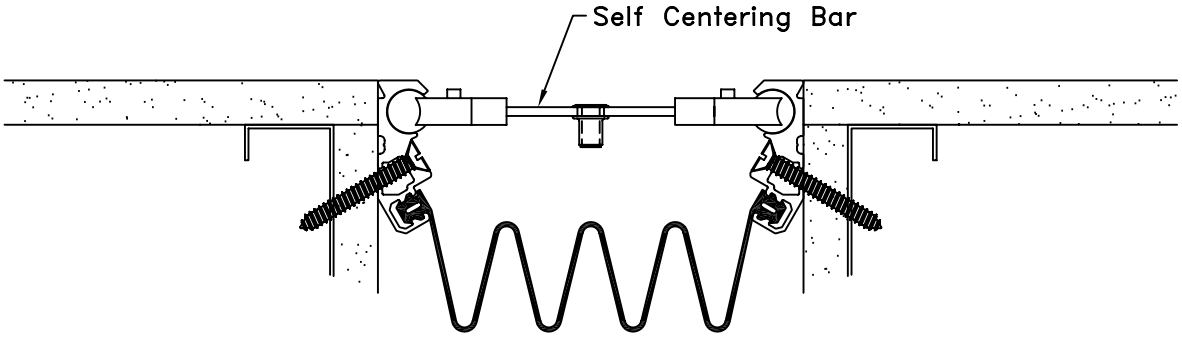

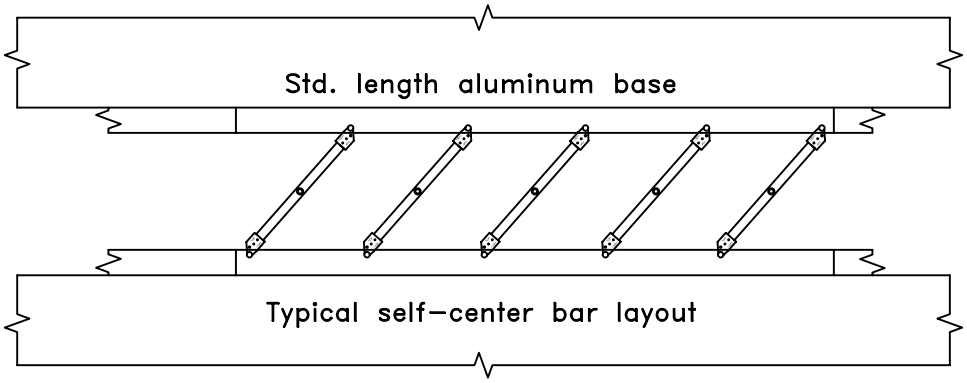

4 As you install aluminum base member sections, slide self-center bars into circular cavities. Make sure that "TOP" indicator is facing out and that all bars are in same orientation. Utilizing duct tape or something simular put a small strip on bar to hold spacing at 24" o.c.

5 Slide gasket into coverplate

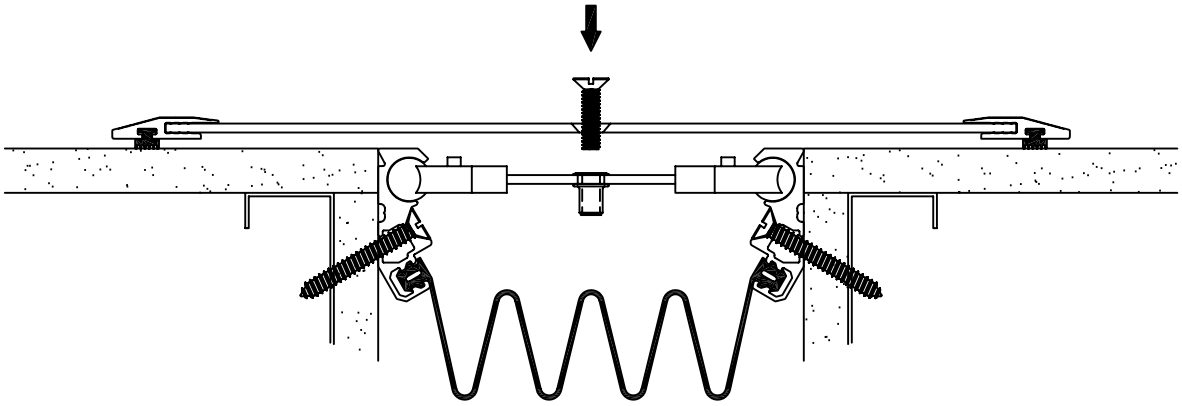

6 Center coverplate over joint opening, aligning the holes for the self–centering bars over the previously installed bars. Insert the ¼" x 1 ¾" csk flathead machine screw through the cover into self–centering bars. Tighten to create measurable tension in bar.

Corner Condition

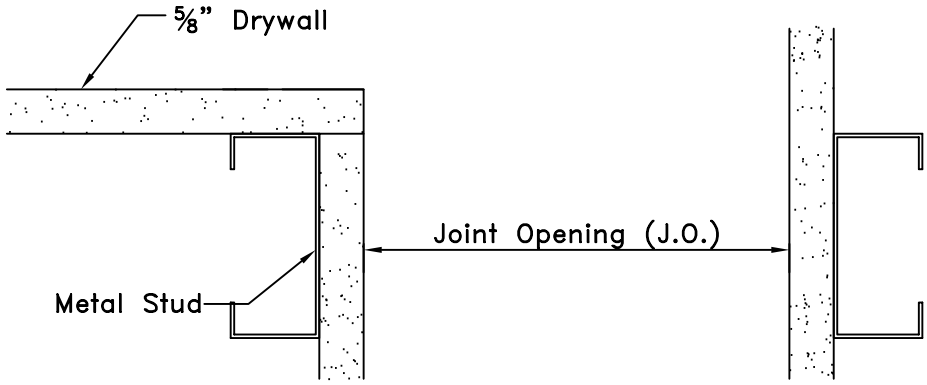

Dimension chart

Model #	"J.O."
EJ-RJX-600W	6"
EJ-RJX-800W	8"
EJ-RJX-1000W	10"
EJ-RJX-1200W	12"
EJ-RJX-1800W	18"
EJ-RJX-2400W	24"

1 Prior to begining work, installer shall inspect for proper wall construction. Verify joint opening is as called for on chart.

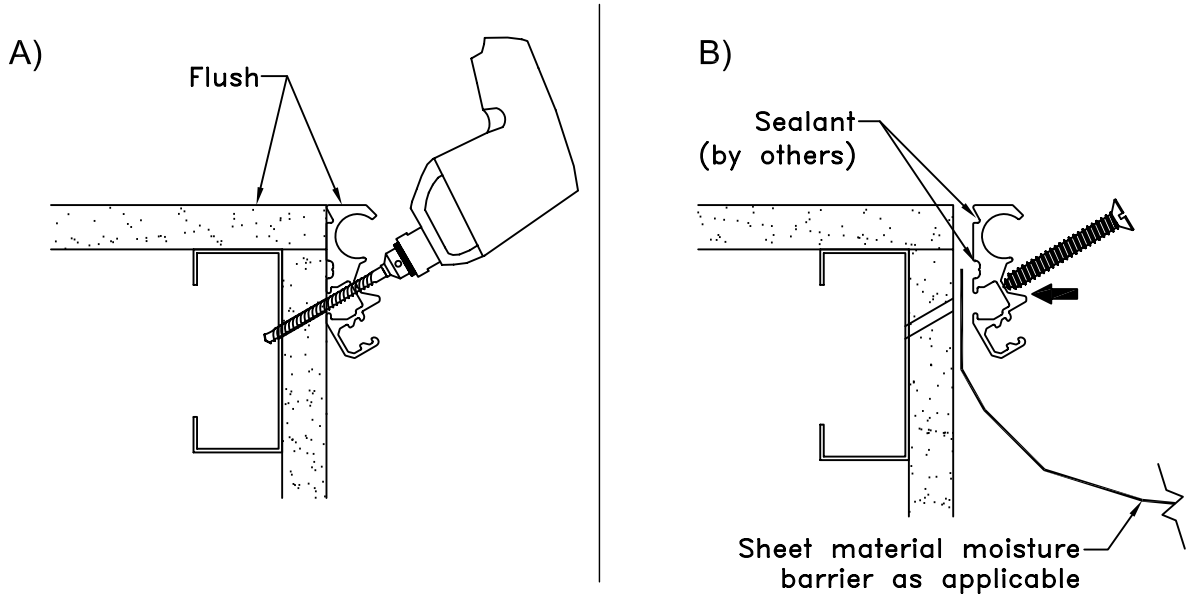

2 A) Place aluminum wall extrusion on edge of opening as shown. Drill through extrusion and drywall into stud.
B) Fasten with drywall screws (by others) spaced at 18" o.c. maximum, start 6" from ends.
<u>NOTE:</u> See step 6 before installing all base members.

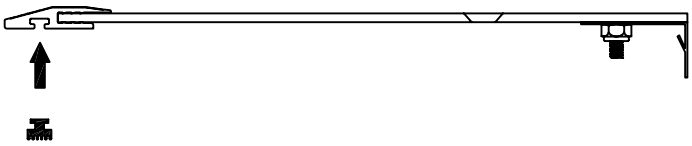

3 Slide gasket into coverplate

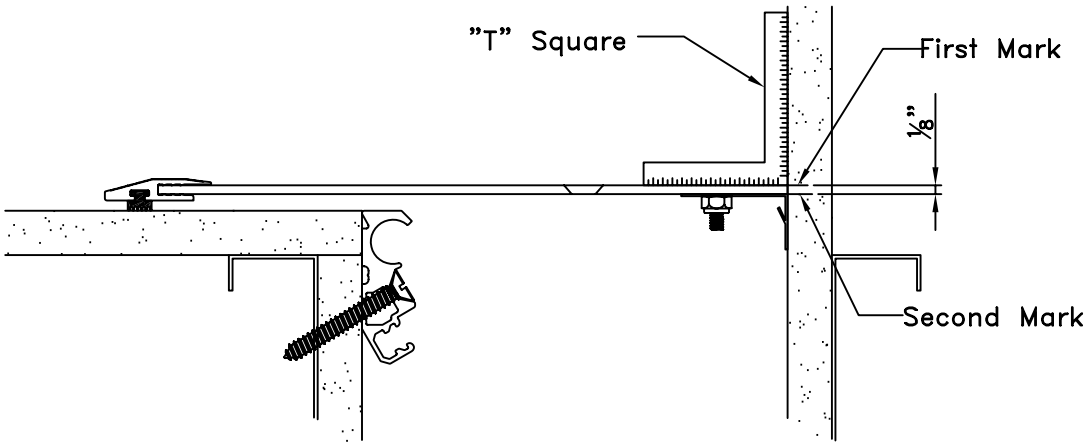

4 Position coverplate onto system as shown until gasket sits firmly against wall. Utilize a T–square to mark a line on wall flush with coverplate. Remove coverplate and make a second mark parallel to first but ⅛" into joint opening.

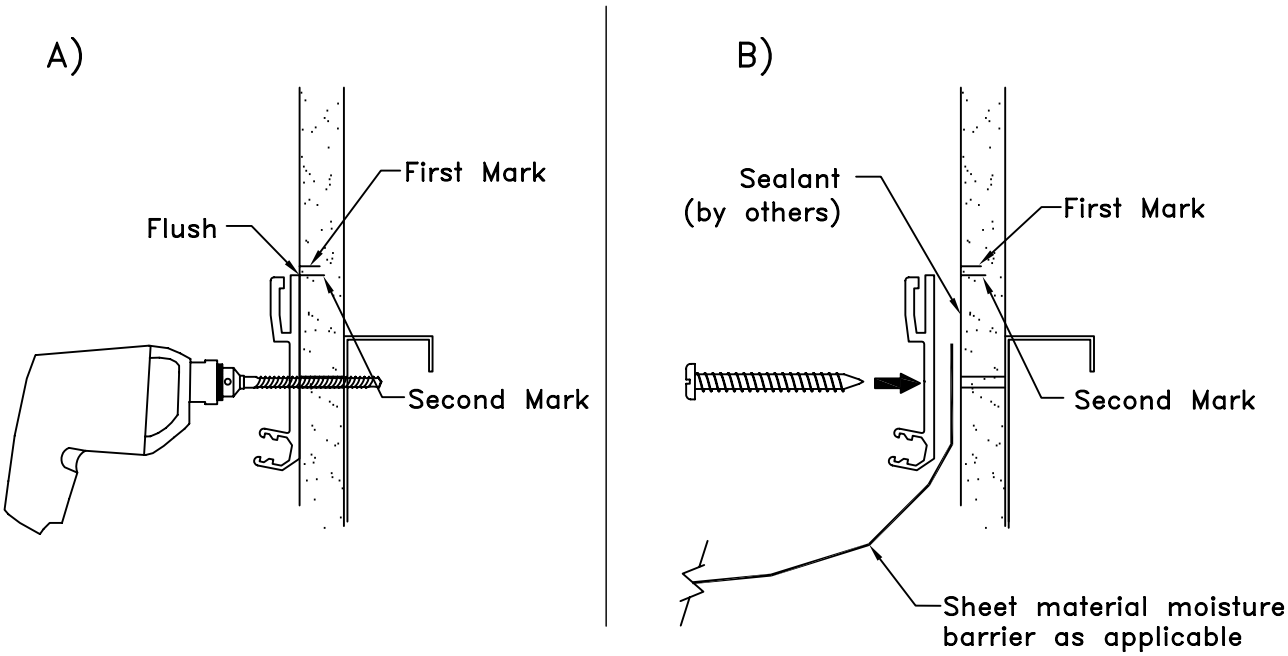

5 A) Position aluminum wall extrusion flush with the second line drawn. Drill through aluminum wall extrusion into adjacent wall at 18" on center.
B) Place sealant and sheet material moisture barrier as required, fasten aluminum wall extrusion to wall utilizing the supplied ¼" x 2" screws supplied.
<u>Note:</u> screw must fasten into wall stud.

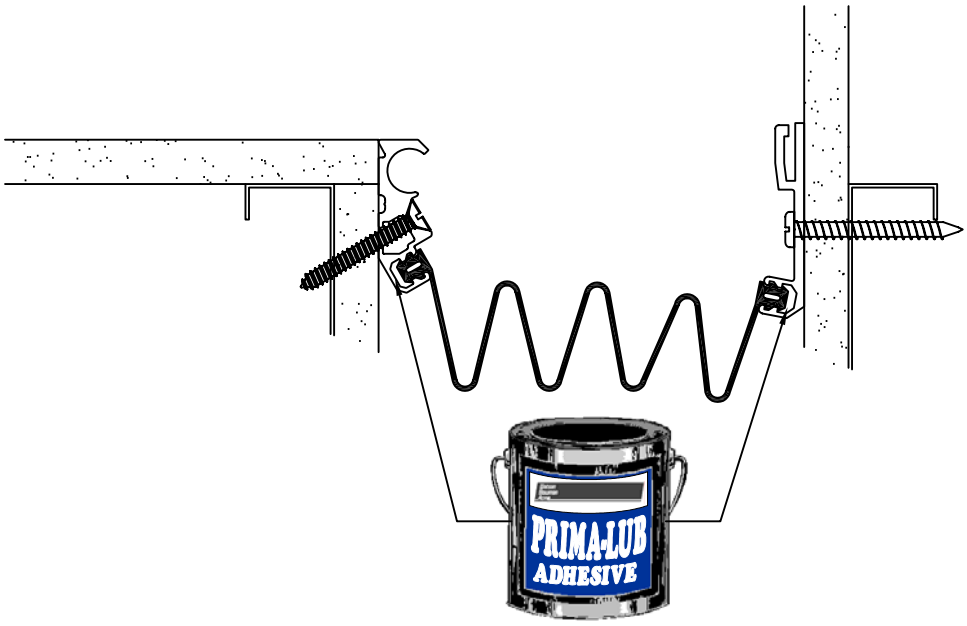

6 Brush apply PrimaLub adhesive into extrusion cavity for the moisture barrier lug. Immediately insert moisture barrier lug into cavity, ensure full engagement.

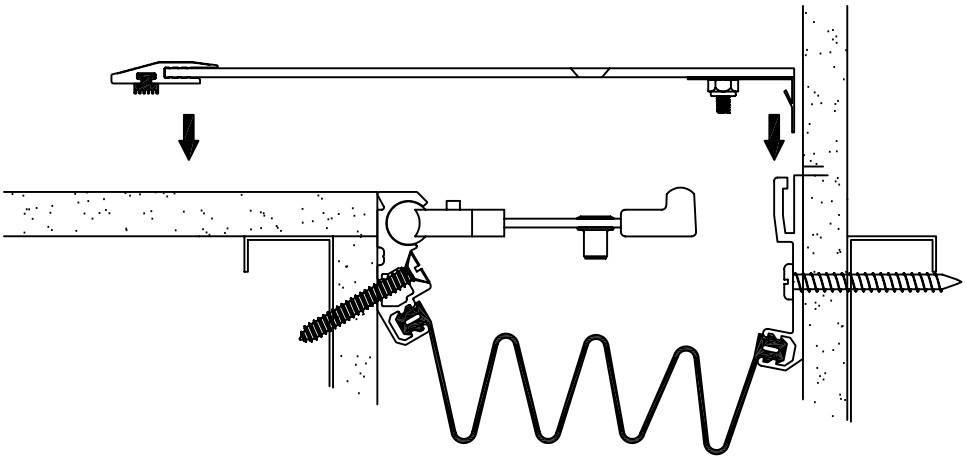

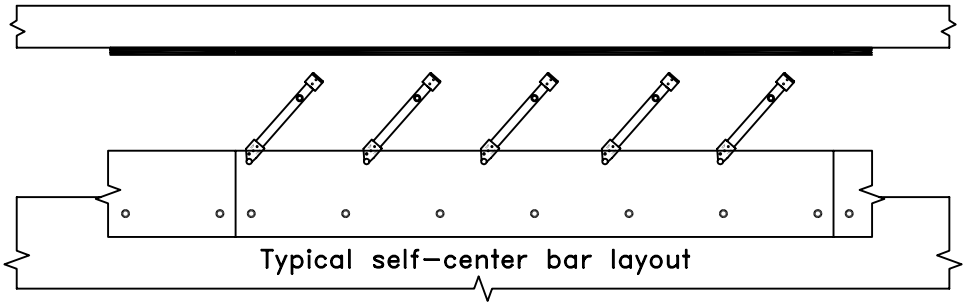

7 As you install aluminum base member sections, slide self–center bars into circular cavities. Make sure that "TOP" indicator is facing out and that all bars are in same orientation. Utilizing duct tape or something simular put a small strip on bar to hold spacing at 24" o.c.

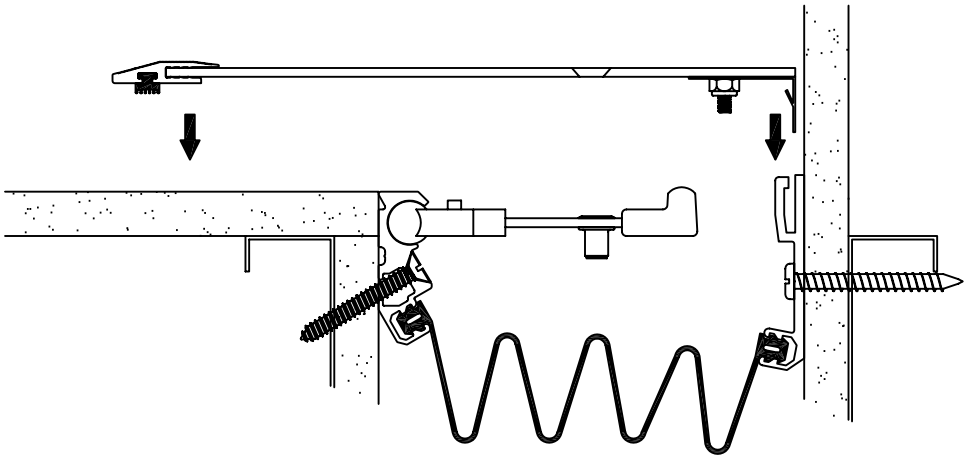

8 Snap lock coverplate with leaf spring assembly into cavity of wall mount.

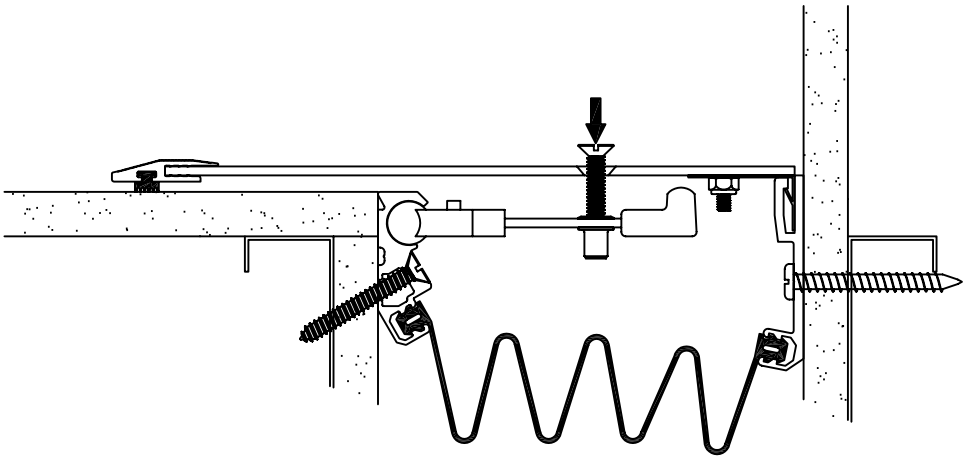

9 Center coverplate over joint opening, aligning the holes for the self–centering bars over the previously installed bars. Insert the ¼" x 1¼" csk flathead machine screw through the cover into self–centering bars. Tighten to create measurable tension in bar.