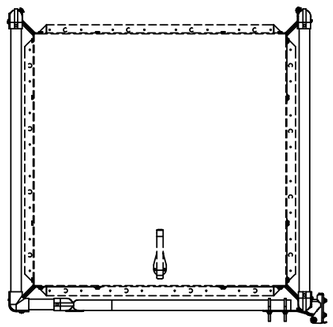

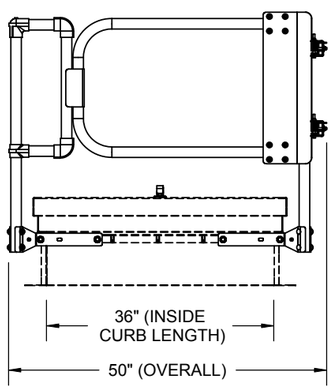

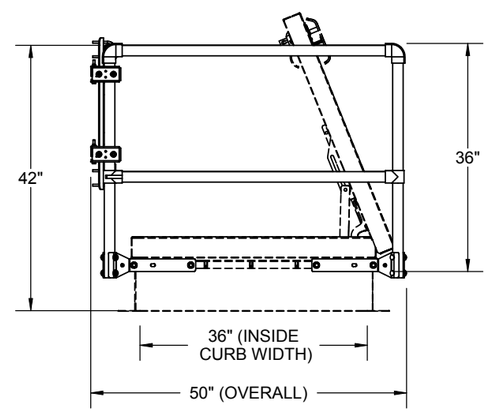

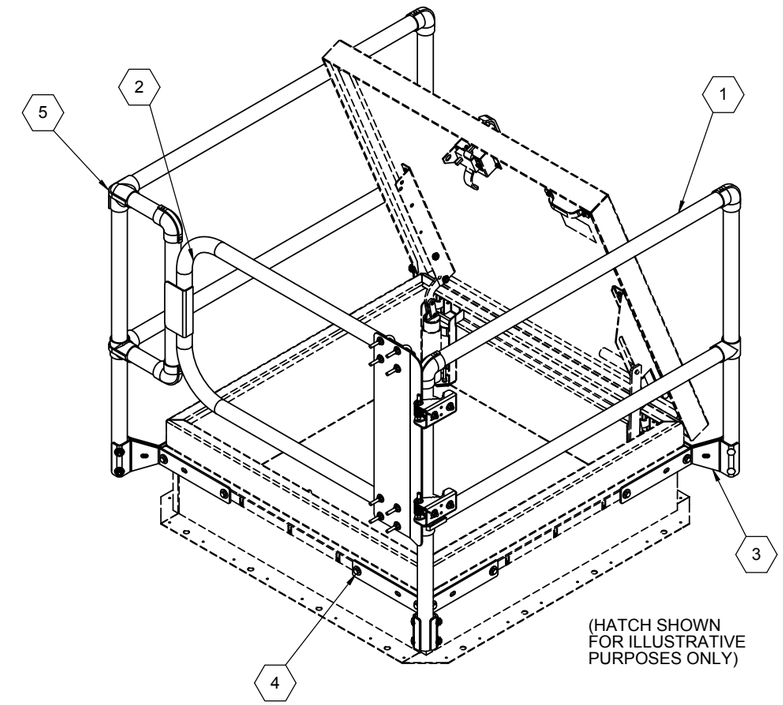

SPECIFICATIONS

1. RAILS, POSTS: GALVANIZED PIPE 1 1/4" I.D. SCH 40 A53 GRADE B SEAMED STEEL
2. GATE: GAVANIZED TUBULAR STEEL SELF CLOSING WITH COIL SPRING, ZINC PLATED
3. COUNTERFLASH MOUNTING BRACKETS: 3/16" ZINC PLATED STEEL FASTENED TO STEEL BACKING PLATE
4. BOLTS: HEX HEAD BOLTS 3/8"-16 x 3/4" GRADE 5 ZINC PLATED
5. RAILING FITTINGS AND PLUGS: MANUFACTURER'S STANDARD CAST WITH SET SCREW HOLD

FITS HATCH SIZES UP TO 36" X 36", FOR SMALLER HATCH SIZES CUT RAILS TO LENGTH IN FIELD

CERTIFICATIONS: MEETS OSHA 29 CFR 1910.23 GUARDING FOR OPENINGS REQUIREMENTS; SUPPORTS 200 LBS. FORCE

PROPRIETARY AND CONFIDENTIAL: THE INFORMATION CONTAINED IN THIS DRAWING IS THE SOLE PROPERTY OF NYSTROM. ANY REPRODUCTION IN PART OR AS A WHOLE WITHOUT THE WRITTEN PERMISSION OF NYSTROM IS PROHIBITED.

nystrom
9300 73rd Avenue North
Minneapolis, MN 55428

	NAME	DATE
DRAWN	DKL	9/23/09
RELEASED	-	-

TITLE: Safety Railings for Roof Hatch 36X36, Front Exit, Steel, Galvanized, Self Closing Gate

SIZE	DWG. NO.	REV
B	SRCG36X36FG	A
WEIGHT: 464.46		SHEET 1 OF 2

ITEM NO.	PART NUMBER	DESCRIPTION	QUANTITY
10	27258-6.00	RAIL, 1-1/4" X 6.00L,	2
20	27258-18.00	RAIL, 1-1/4" X 18.00L,	1
30	27258-43.75	RAIL, 1-1/4" X 43.75L,	4
500	27180	PKG, CORNER POST, ZPS,	4
510	27185	FTG, ELBOW,	5
515	27188	FTG, TEE,	3
520	27186	FTG, CROSS ELBOW,	1
525	27231	FTG, DBL TEE,	1
575	SRCG-GATE-30	GATE, 30,	1

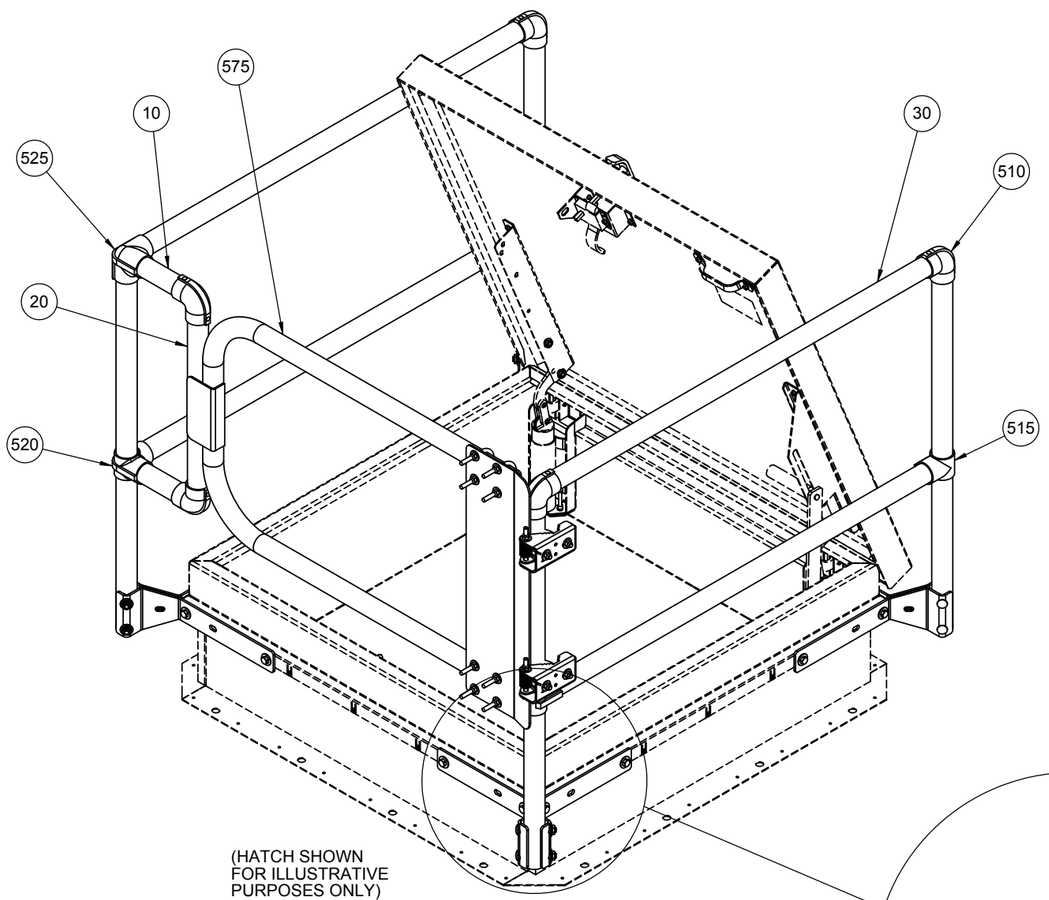

(HATCH SHOWN
FOR ILLUSTRATIVE
PURPOSES ONLY)

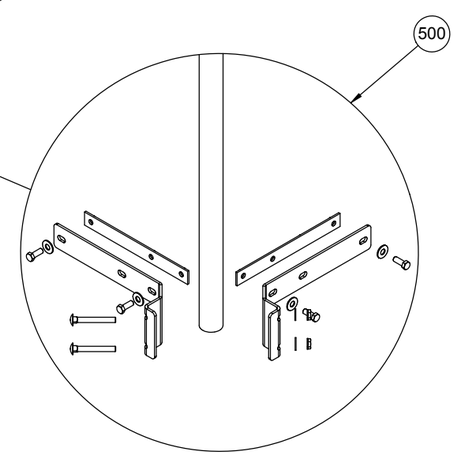

DETAIL A
SCALE 1 : 8

nystrom

9300 73rd Avenue North
Minneapolis, MN 55428

TITLE:
Safety Railings for Roof Hatch
36X36, Front Exit,
Steel, Galvanized, Self Closing Gate

	NAME	DATE
DRAWN	DKL	9/23/09
RELEASED	-	-

SIZE: B
DWG. NO.: SRCG36X36FG
REV: A
WEIGHT: 464.46
SHEET 2 OF 2

PROPRIETARY AND CONFIDENTIAL: THE INFORMATION CONTAINED IN THIS DRAWING IS THE SOLE PROPERTY OF NYSTROM. ANY REPRODUCTION IN PART OR AS A WHOLE WITHOUT THE WRITTEN PERMISSION OF NYSTROM IS PROHIBITED.