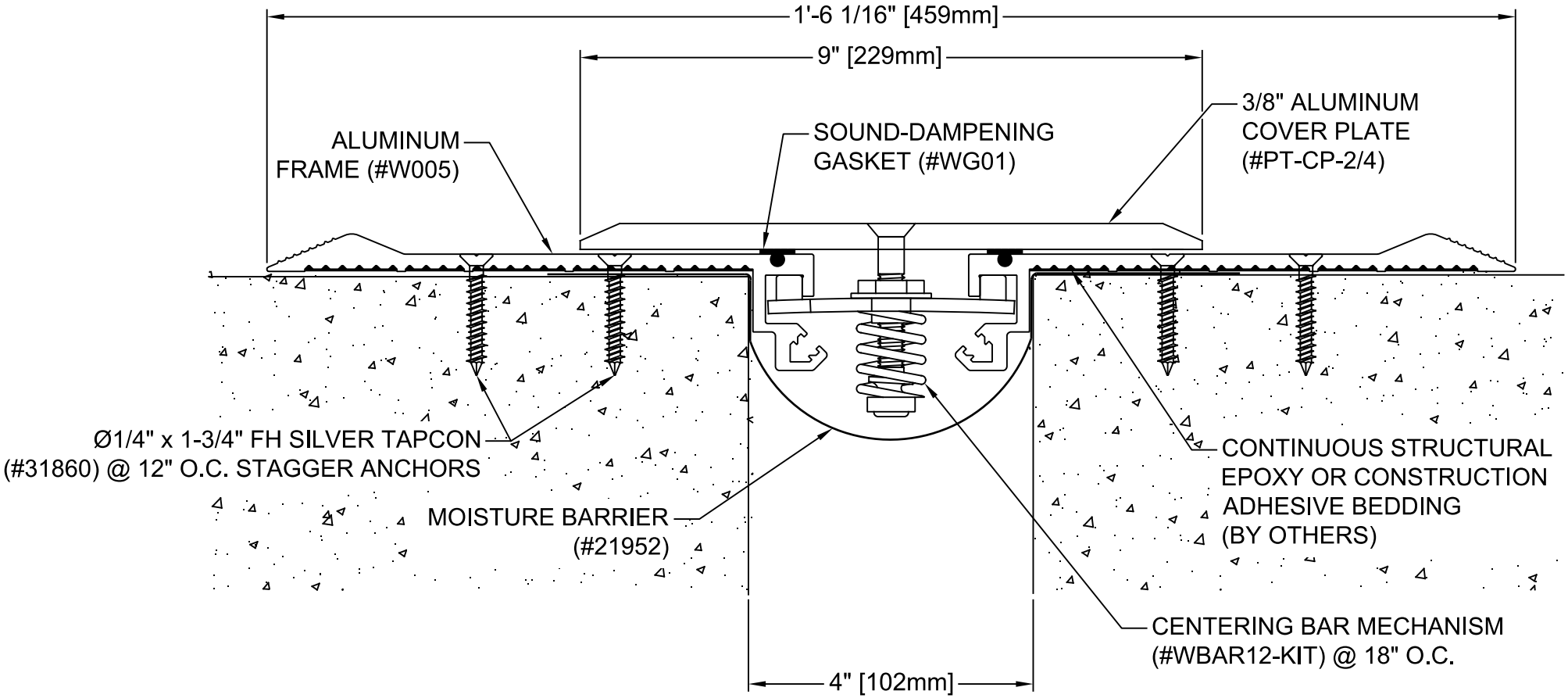

FLOOR-TO-FLOOR SURFACE APPLICATION

EXPOSED FINISH: MILL

MOVEMENT: + 70% / - 22% JOINT WIDTH

STOCK LENGTHS: 10'-0"

PROJECT:					
ARCHITECT:					
CONTRACTOR:					
QTY:					
PART#:				EJN-PTS-400	
nystrom® 9300 73rd Ave N., Minneapolis, MN 554428 800-547-2635 info@nystrom.com				TITLE: SEISMIC ALUMINUM HEAVY DUTY FLOORING SYSTEM SURFACE APPLICATION	
	NAME	DATE	SIZE	DWG. NO. EJN-PTS-400	REV
DRAWN	JPK	06/16/23	A		A
RELEASED			WEIGHT:		SHEET 1 OF 1

PROPRIETARY AND CONFIDENTIAL: THE INFORMATION CONTAINED IN THIS DRAWING, IS SOLE PROPERTY OF NYSTROM. ANY REPRODUCTION IN PART OR AS A WHOLE, WITHOUT THE WRITTEN PERMISSION OF NYSTROM, IS PROHIBITED. © 2020 NYSTROM, INC.