9300 73rd Ave N.
Brooklyn Park, MN 55428

Toll-Free: 800-547-2635
Fax 800-317-8770

NYSTROM
Right to site.

Direct Phone: 763-488-9200
Direct Fax: 763-488-9201

e-mail: info@nystrom.com
Internet: www.nystrom.com

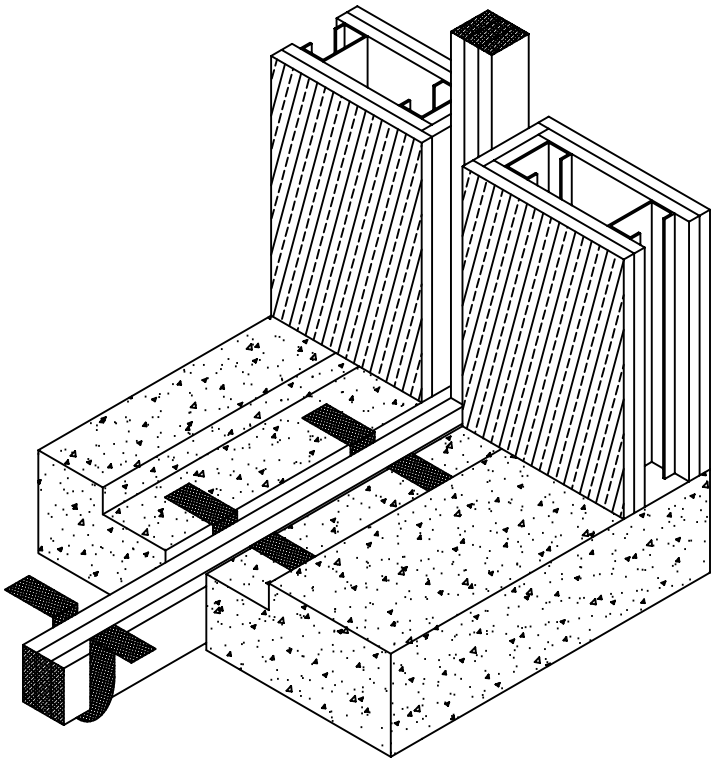

# Flame Shield – Life Safety Series Model(s) "EJ–HTS" & "EJ–VTS" Fire Barrier Systems

The following installation procedure is very important and must be fully understood prior to beginning any work. To ensure proper installation and performance of expansion joint system the following actions must be completed by the installing contractor. Failure to do so will affect product warranty.

1) Carefully read and understand installation procedure. Contact Technical Service Department for product assistance.
2) Inspect all shipments and materials for missing or damaged components and hardware. Contact Customer Service with order number and invoice for prompt assistance.
3) Inspect substrate or adjacent construction for acceptance before beginning work. Report unacceptable construction to the project manager for scheduled repair work.

PN: N20114

# Standard Components

* 3/16" Dia. X 1 1/4" Lg. Masonry Spike Anchor (PN: 6516)

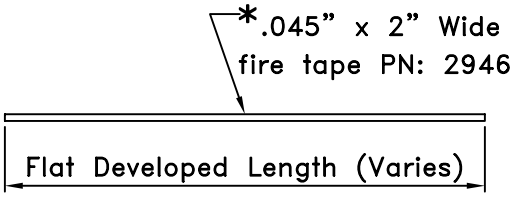


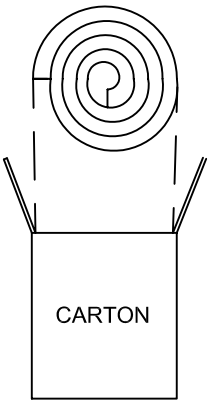


1" x 5" Encapsulated Coils (PN: 3029)

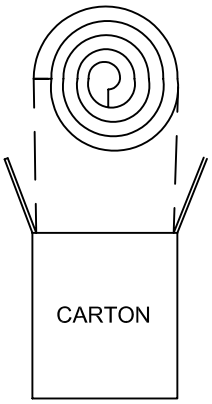


1/2" x 5" Encapsulated Coils (Pn: 3028)

* Components required for Horizontal condition installation.

# Installation Procedure

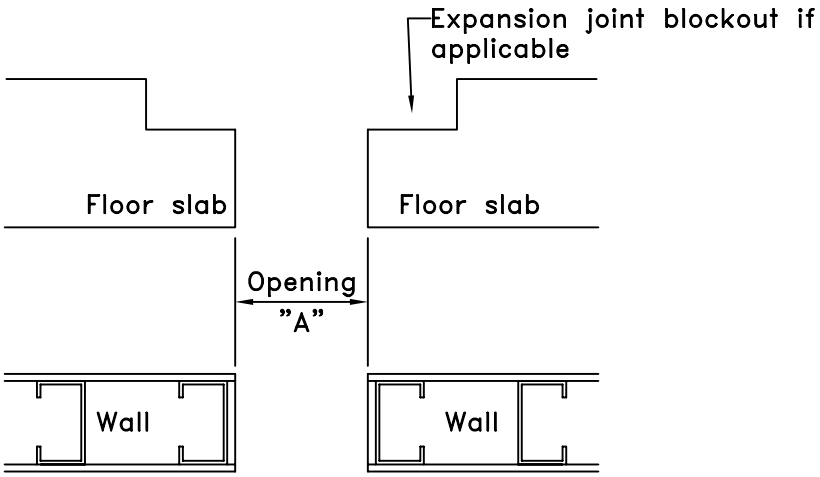


**1** Prepare and/or inspect opening as indicated on the shop drawing or manufacturers literature. Correct all imperfections that may affect proper installation of flame shield fire barrier system.

---

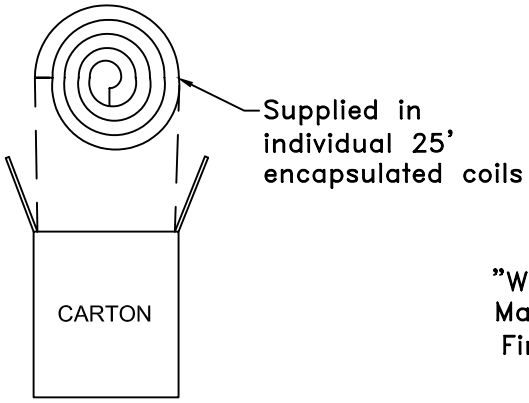


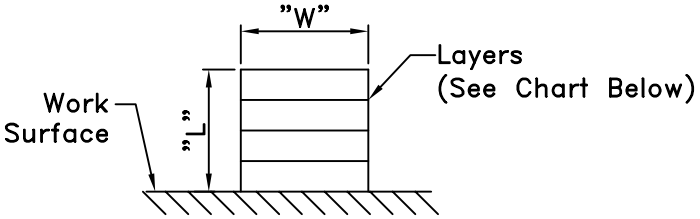


"W" – denotes width of Material and determines Fire Rating (Typ – 5")

"L" – denotes number of layers to be installed in opening based on total design movement

| Model # (*) | Layers of PN: 3028 | Layers of PN: 3029 |
|---|---|---|
| EJ-HTS-1 & EJ-VTS-1 | - | 2 |
| EJ-HTS-1.5 & EJ-VTS-1.5 | 1 | 2 |
| EJ-HTS-2 & EJ-VTS-2 | 1 | 3 |
| EJ-HTS-2.5 & EJ-VTS-2.5 | - | 4 |
| EJ-HTS-3 & EJ-VTS-3 | - | 5 |
| EJ-HTS-3.5 & EJ-VTS-3.5 | 1 | 5 |
| EJ-HTS-4 & EJ-VTS-4 | 1 | 6 |

* EJ–HTS models have a fire rating to 3hrs and EJ–VTS has a fire rating to 2hrs.

**2** Unpackage flame shield from original manufacturers carton and stack or assemble the specified number of flame shield layers on a suitable work surface in preparation for insertion into the expansion joint opening.

<u>Note:</u> The flame shield blanket material shall arrive at the jobsite factory cut to predetermined widths based on the required fire rating. The number of layers installed into the expansion opening has been predetermined and is based on the expected maximum width of the expansion opening due to movement.

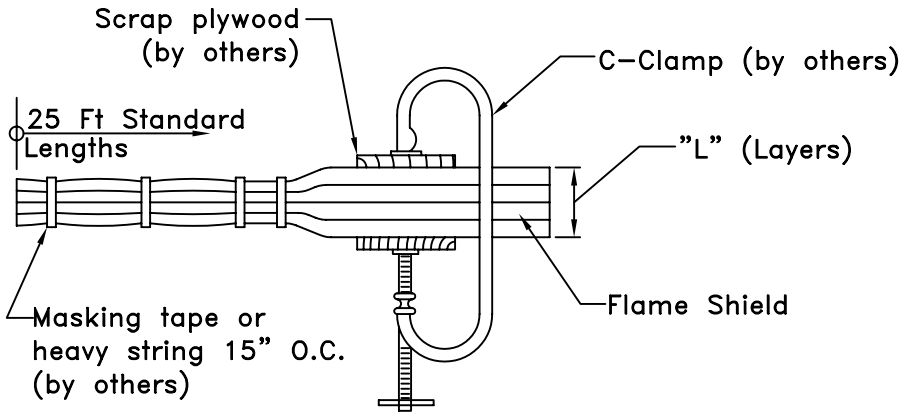


**3** Using C–clamps and sections of plywood, compress flame shield and wrap with one layer of masking tape or heavy string at approximate intervals of 15 inches. This will pre–compress the material and provide for a smooth and efficient installation process.

---

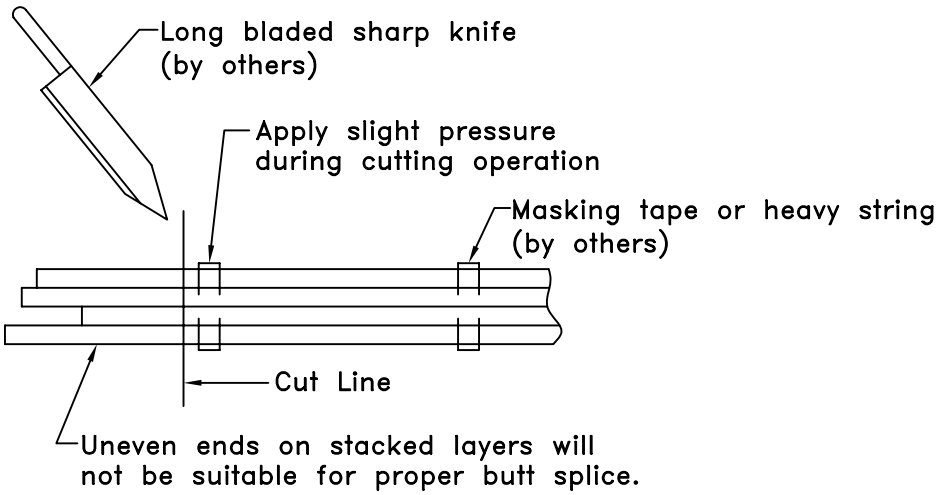


**4** The contractor shall field cut the assembled stack of flame shield layers to the length required for installation. The cut shall be true, square and smooth and will form one of the ends that will be used in properly completing a field butt splice. <u>Note:</u> It is recommended that cut lines be located just to the right or left of the tape or string. This will maintain material alignment & compression necessary to complete a proper butt splice.

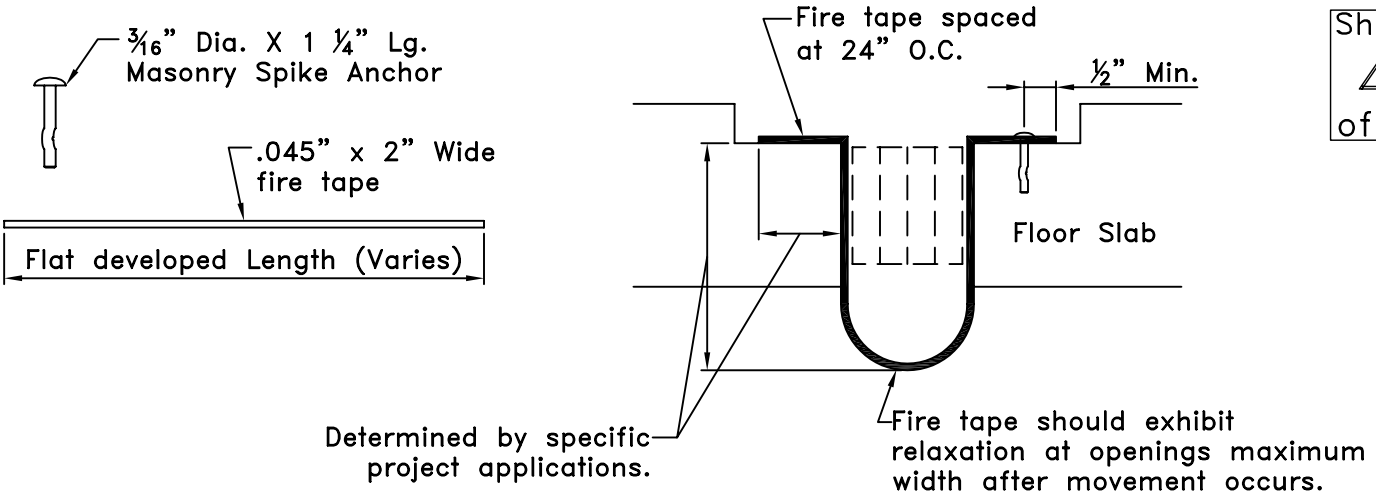


5

Horizontal applications only:
Prior to inserting flame shield, the contractor shall install .045" thick by 2" wide fire tape at 24" O.C.(maximum spacing) into the expansion opening. The tape shall be secured to the base of the concrete blockout by utilizing 3/16" dia. Spike anchors. The contractor shall ensure that the material is properly draped into the expansion joint opening to allow for proper installation of the flame shieldfire barrier.
Note: Fire tape is supplied in rolls to the project site. Based on project requirements short lengths are cut from the factory roll utilizing a pair of standard scissors.

---

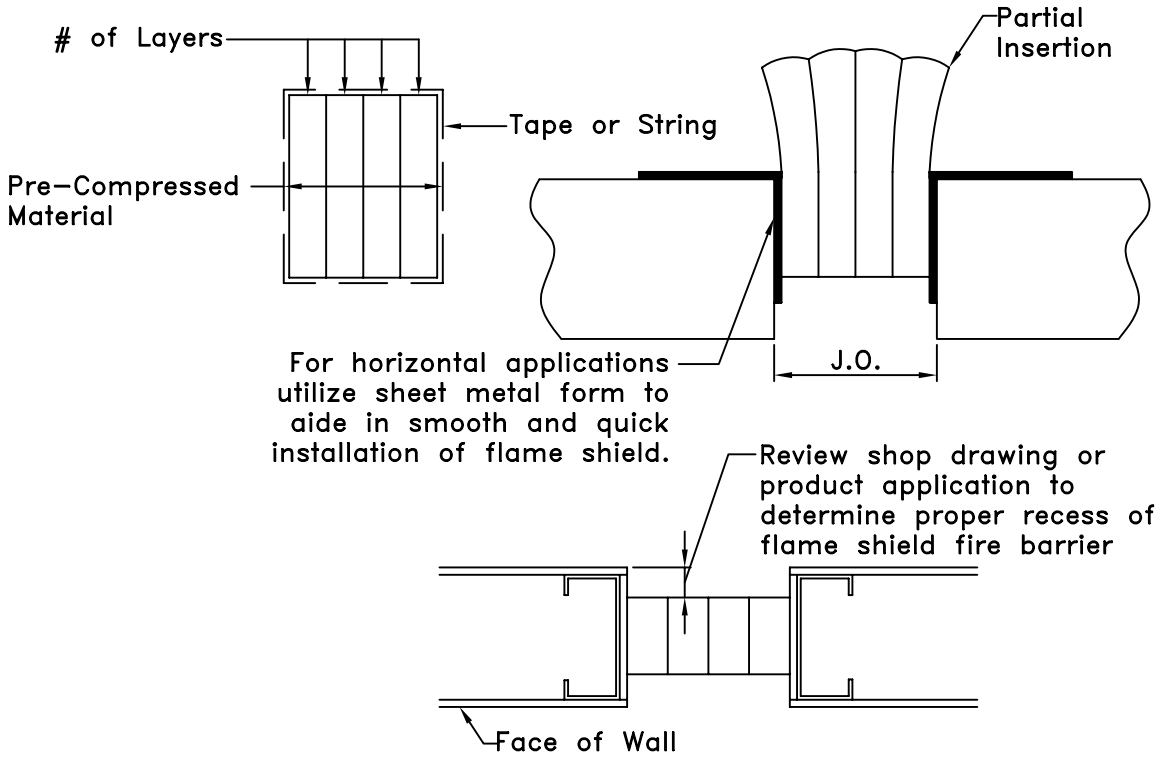


6

Typically, the corner at the edge of the concrete slab is rough. To aid in the installation of the flame shield material, it is recommended to form an I-shaped thin gauge sheet metal profile approximately 8 to 10 feel long. One will be required for each side of the expansion joint opening. Seat the sheet metal profiles on the edge of the concrete slab and begin to insert material. The depth at which the material is inserted into the expansion opening will be determined by the requirements of the expansion joint assembly as detailed on the shop drawings. If no requirements exist, center the material in the floor or wall opening.

Note: It is critical that the flame shield be installed into the expansion opening in the proper orientation. For verification, the installer shall ensure that the number of layers installed can be measured across the width of the opening. The width at which each layer was factory cut shall extend vertically into the joint opening.

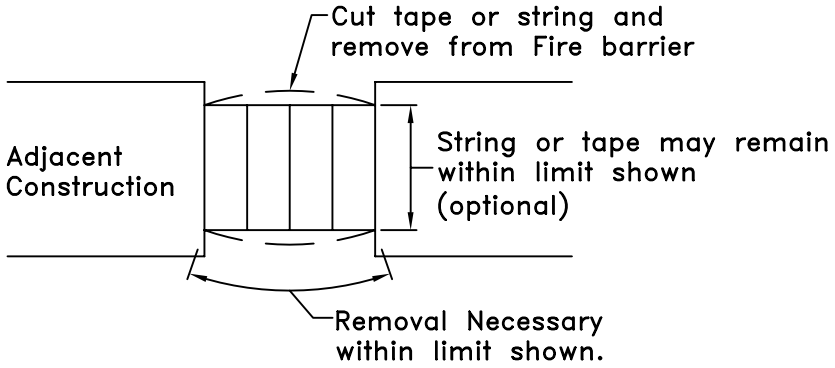


**7** Using a utility knife, cut and remove masking tape or string to prevent restricted movement of fire barrier. If masking tape was utilized it may be necessary to remove tape from both sides of fire barrier.

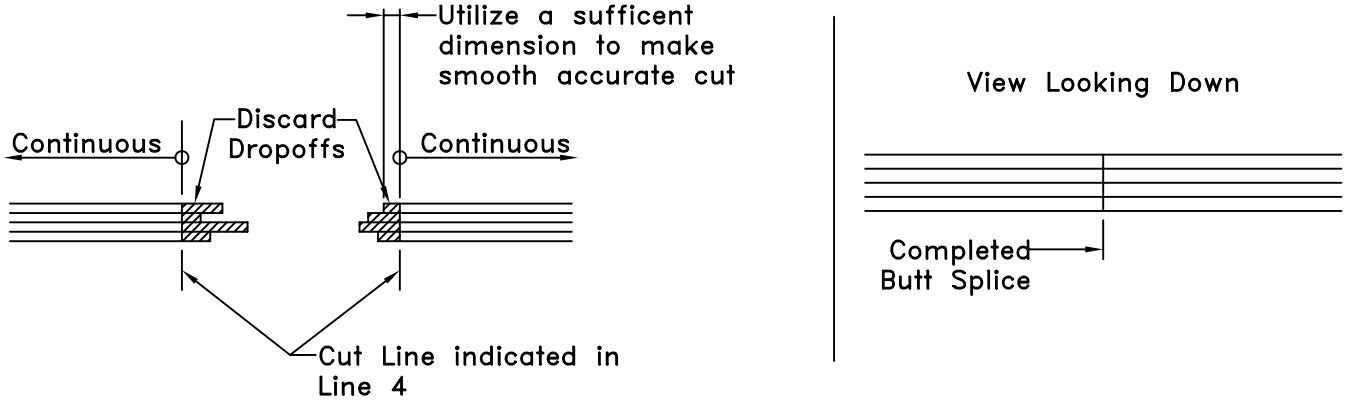


**8** The contractor shall be responsible for completing a square butt splice. Join assembled layers of material with a smooth square cut by simply butting the material (using no adhesives) to the square end of the material previously installed. The contractor shall ensure that the butt splice is closed tight showing no signs of light filtering through the splice area.
<u>Note:</u> Refer to Step 4 for review of Thermoshield cutting procedure.

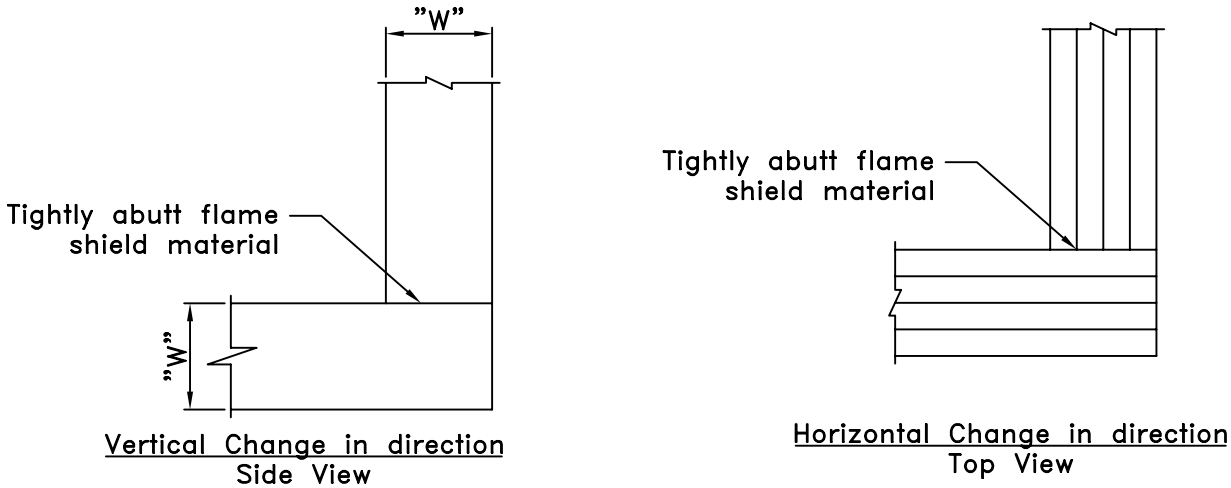


**9** Utilizing procedure to properly achieve a butt splice, prepare ends of flame shield fire barrier as shown in diagram to accomodate changes in direction. Inspect all splices to ensure that all material abutts tightly showing no signs of light filtering through from the opposing side.

**10** For installation of subsequent sections of flame shield materials, repeat steps 2 through 8.